LOAN CONTAINER INCOMING INSPECTION

CMORE® CT System Navigated Instruments

swiss quality

confidential, property of icotec ag, Switzerland

CMORE® CT System Navigated Instruments

45-870-1

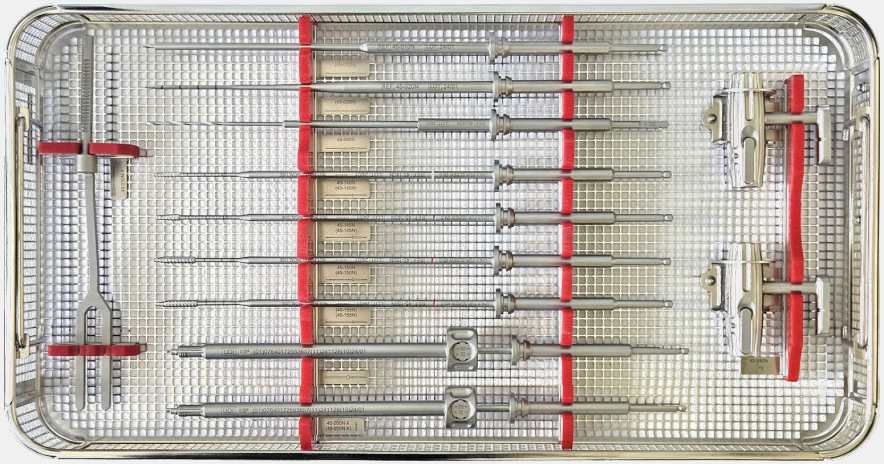

Overview Inspection Aids

- **Carbon/PEEK screw 16-4020-3XXX (H301)**

- **Palm Handle 45-110 and In-line Handle 45-100**
  - **OR Grip, AO Coupling 39-15-1 (H309)**

General Control

- **Do the contents of the container correspond to the kit profile?**
- **Are the instruments intact (not clearly damaged)?**
- **Is the laser marking legible/the data matrix code visible?**
  - Instruments where the laser marking is no longer legible must be replaced.
  - Instruments where the data matrix code (UDI) is no longer visible must be replaced. (When available, a scanner can be used to check the data matrix code.)

- **Movable parts/joints – maintenance using surgical instrument oil!**

  → **Functional inspections for instruments** (see following pages)

- **If an instrument is replaced, all tests involving this instrument have to be repeated.**
- **Instructions for Reprocessing: 0330US**

Functional Inspection

- **AO Couplings on Instruments**
  - Functional inspection of the couplings of all following instruments with handle 45-100 or 45-110 (use each handle at least once)
    - Navigated Awl (45-010N)
    - Navigated Pedicle Probe, Straight (45-020N)
    - Navigated Drill Bit, Ø 2.3 mm (45-040N)
    - Navigated Solid Taps (45-140N, 45-145N, 45-150N)
    - Navigated Screwdriver, Simple, T15 (45-200N-1)

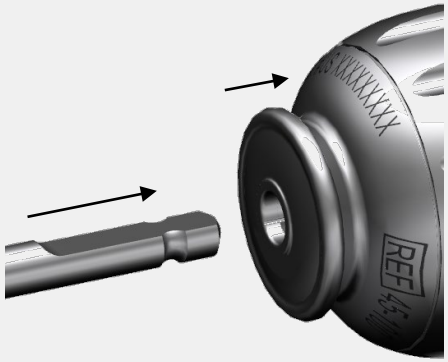

Functional Inspection

- **Navigated Awl (45-010N) and Navigated Pedicle Probe, Straight (45-020N)**
  - Check tips, no obvious damage and tips must not be bent
  - Functionality inspection of the navigated coupling with the adapter (42-680N)

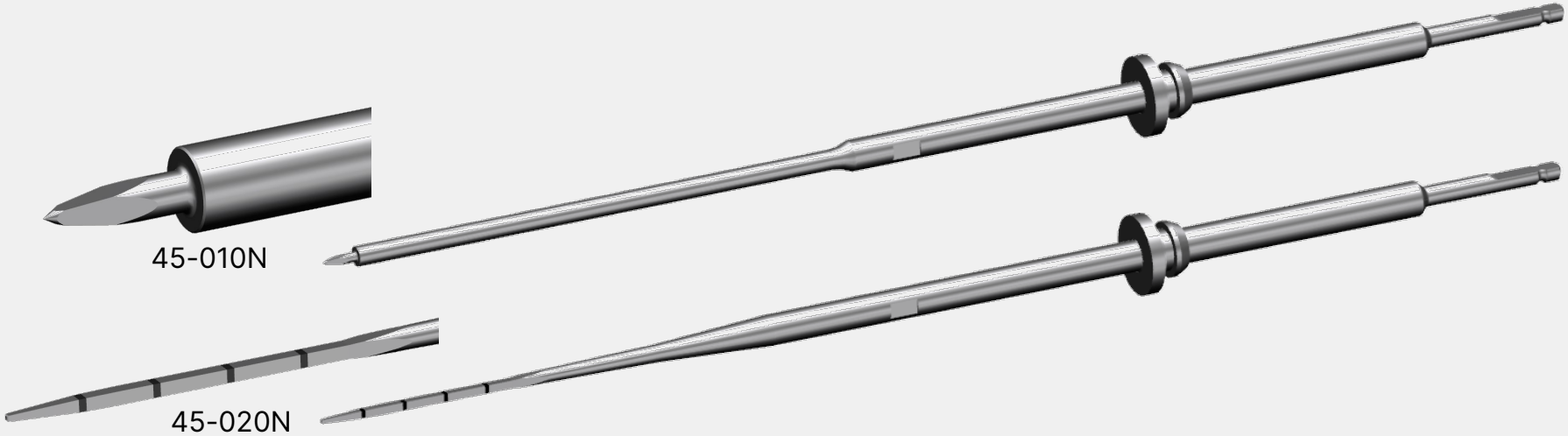

- **Navigation Adapter (42-680N)**
  - Movable parts/joints – maintenance using surgical instrument oil!
  - Functional inspection of the navigated coupling with a navigated instrument

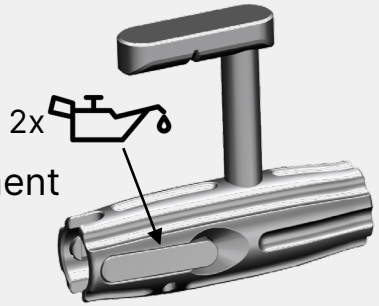

Functional Inspection

- **Drill Guide Sleeve (45-030) and Drill Guide Stop Navigated (45-030N-1) and Navigated Drill Bit, Ø 2.3 mm (45-040N)**
  - Insert the drill stop into drill guide sleeve whilst pushing the button: It should be possible to insert it evenly up to 40 mm.
  - Insert the drill bit into drill guide stop and rotate completely (should move easily during rotation)

- **Drill Guide Sleeve (45-030) and Drill Guide Stop Navigated (45-030N-1)**
  - Set the drill stop to 0 mm, apply pressure to the drill guide stop, the stop must be held in position

- **Navigated Drill Bit, Ø 2.3 mm (45-040N)**
  - Concentricity check (roll on edge of table)
  - Drill tip still sharp-edged?

- **Drill Guide Sleeve (45-030)**
  - Movable parts/joints – maintenance using surgical instrument oil!

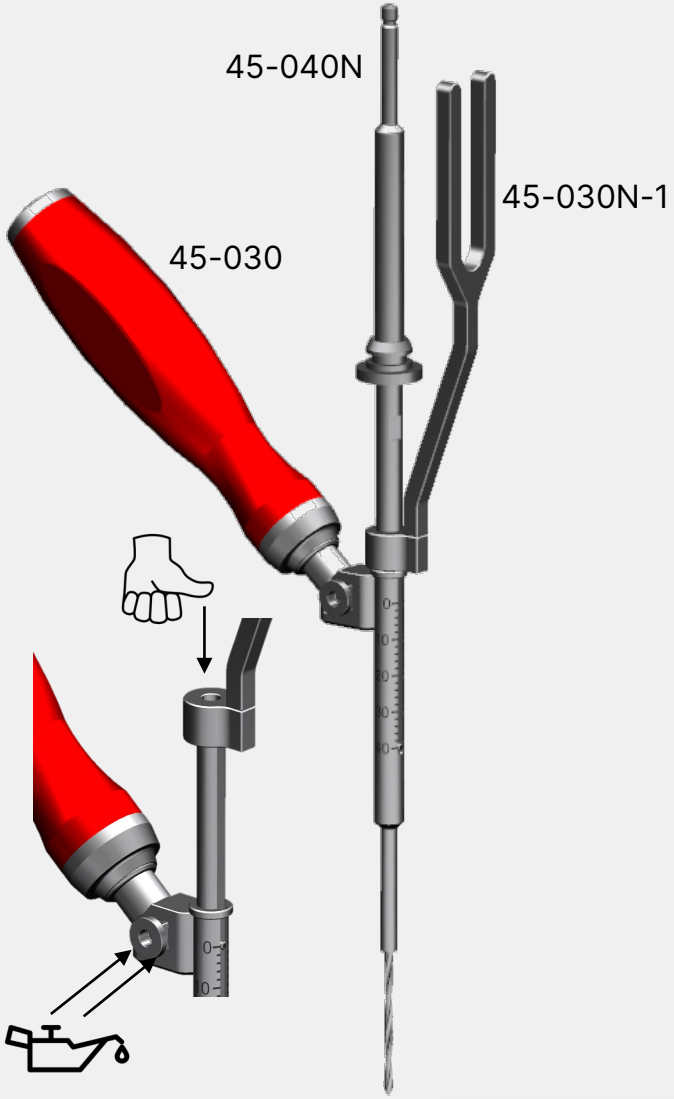

Functional Inspection

- **Navigated Solid Tap (45-140N, 45-145N, 45-150N)**
  - Is the tip deformed?
  - Is the thread still sharp-edged?
  - Functionality inspection of the navigated coupling with the adapter (42-680N)
  - Color marking still intact?

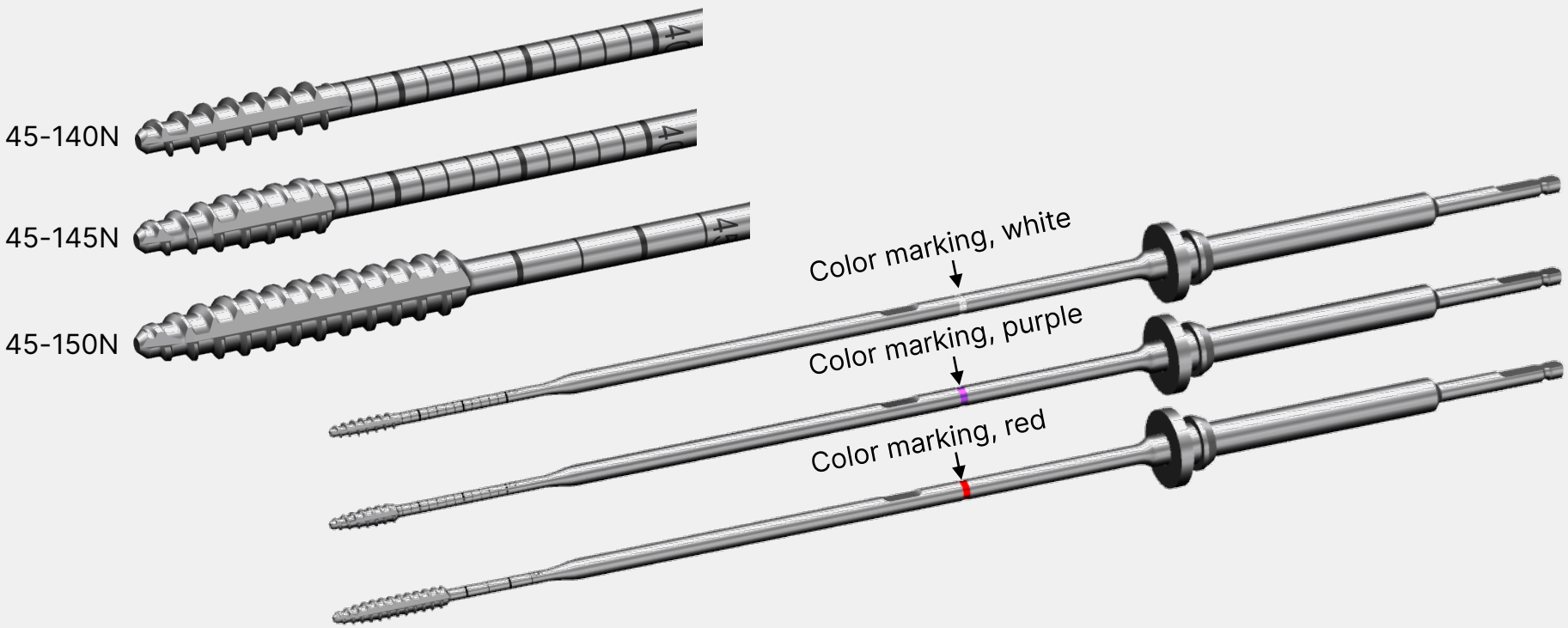

Functional Inspection

- **Navigated Screwdriver, Simple, T15 (45-200N-1)**
  - Torx is still intact (no significant signs of wear)
  - Disassemble and assemble screwdriver (according to instructions for reprocessing 0330US)
  - PEEK sleeve holds entire instrument weight via spring strap
  - The Carbon/PEEK screw 16-4020-3XXXX (H301) can be mounted rigidly and straight
  - Functionality inspection of the navigated coupling with the adapter (42-680N)

swiss quality
confidential, property of icotec ag, Switzerland